i-SERIES Dimensions
PACX - 7.5, 10, 12.5 Ton
PHPX - 7.5 & 10 Ton

Marc Climatic Controls, Inc.

5-10-07

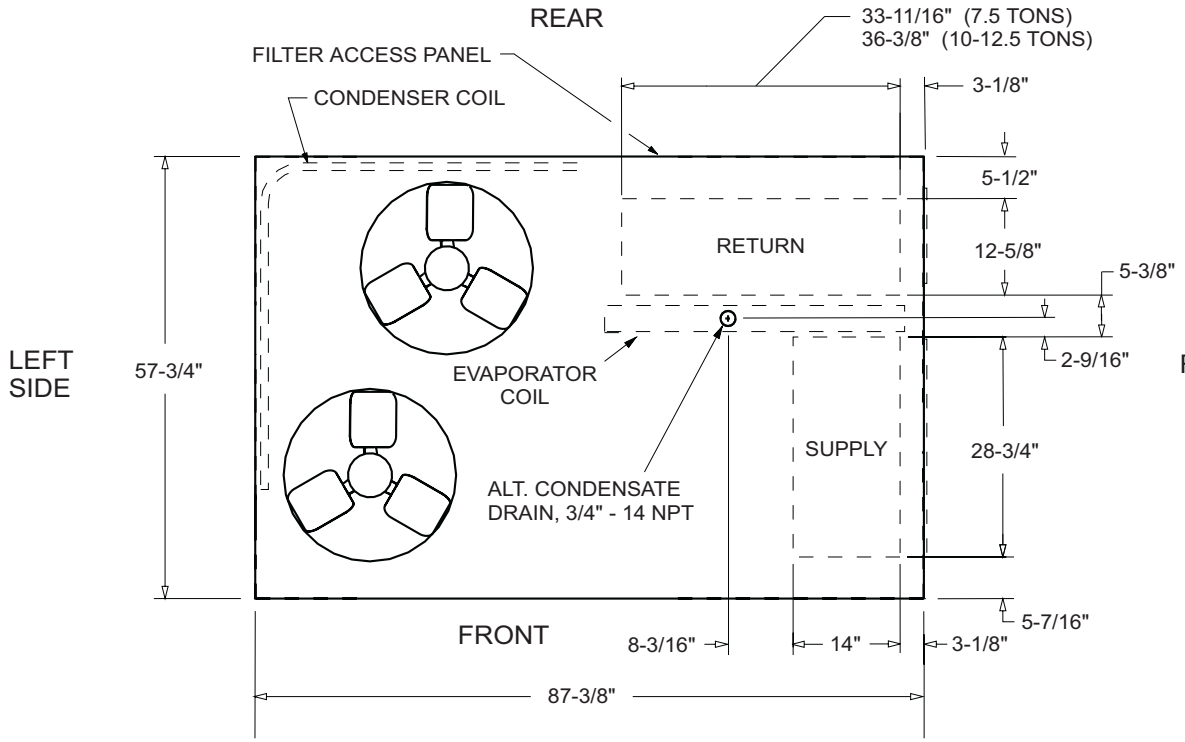

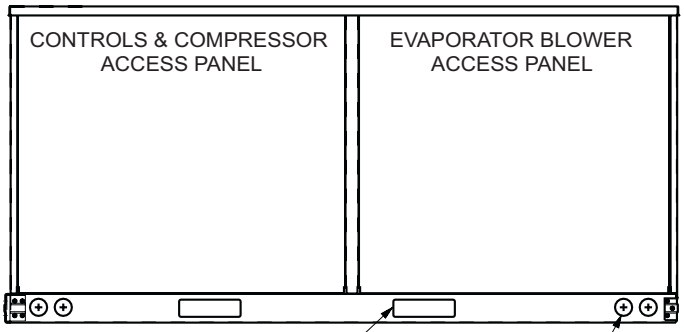

FRONT

NOTE: NEMA 7 ENCLOSURE IS NOT SHOWN

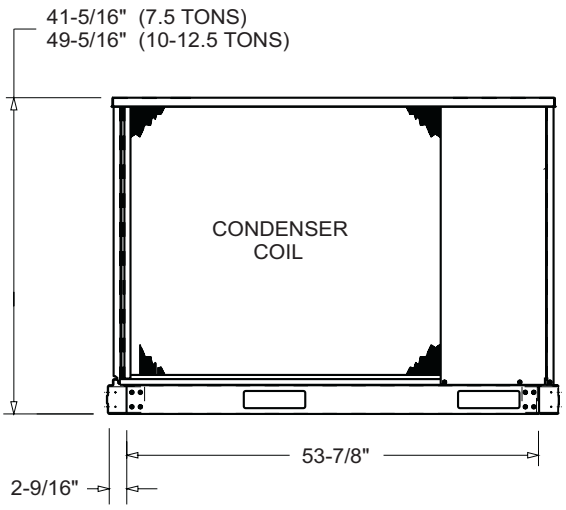

LEFT SIDE

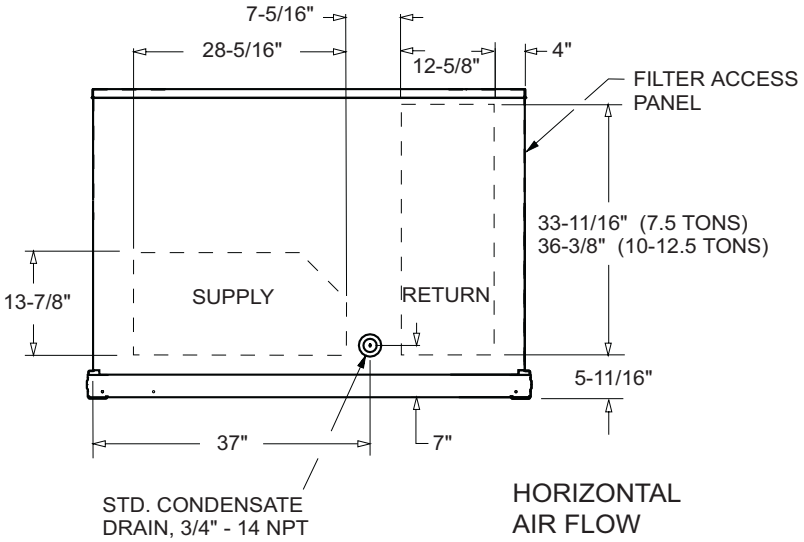

RIGHT SIDE

HORIZONTAL AIR FLOW SUPPLY-RETURN